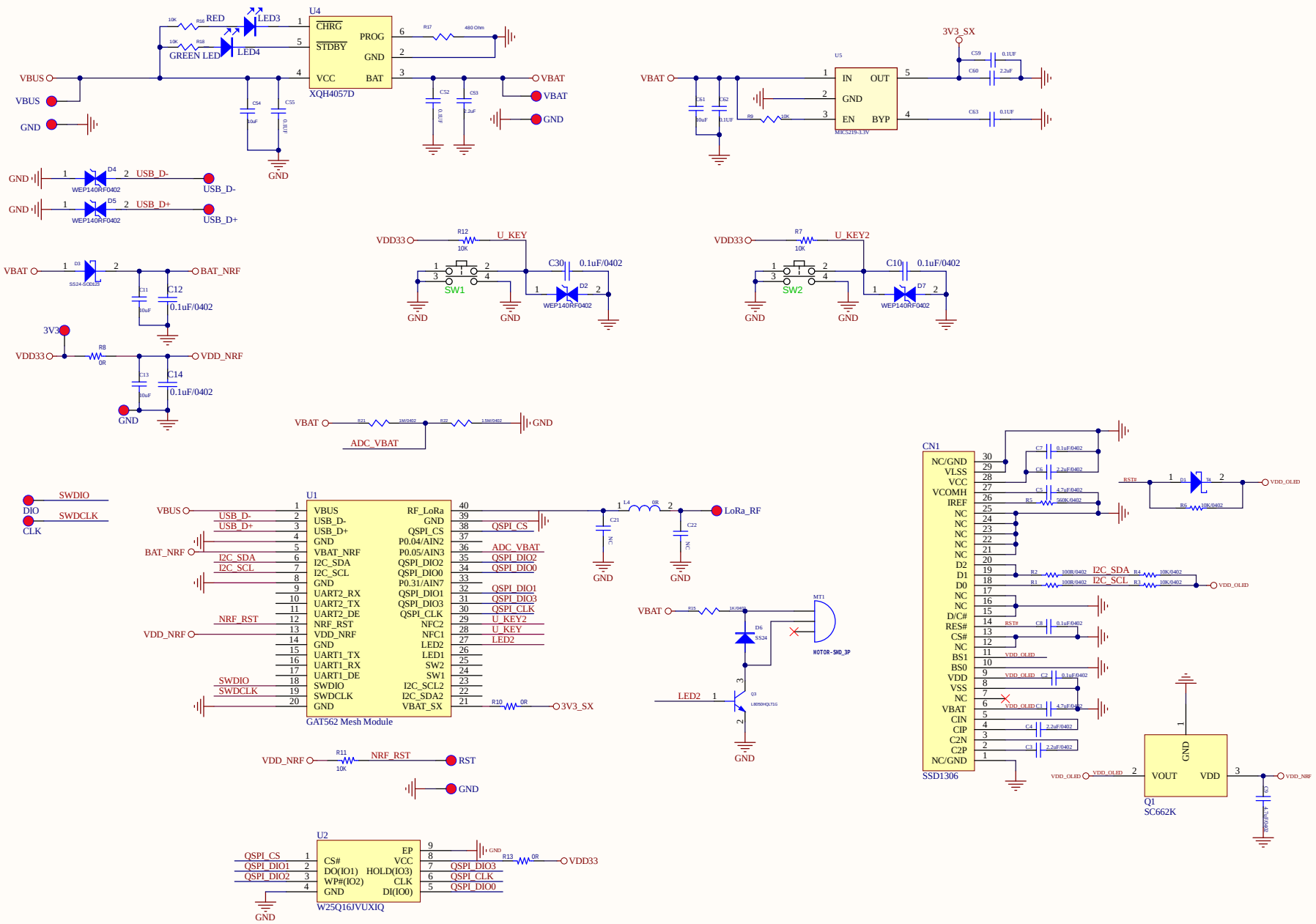

Title		
Size A3	Number	Revision
Date: 7/03/2025	Sheet of	
File: E:\加特物联\..\Mesh Watch13 V1.0.SchDoc	Drawn By:	