USB

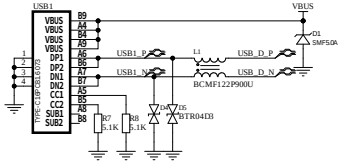

OLED Display

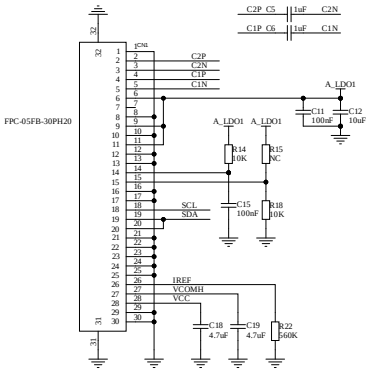

Slave 7 bit address definition:

VHF: R52=0R R51=NC 0x3C

UHF: R52=NC R51=0R 0x3D

Botton

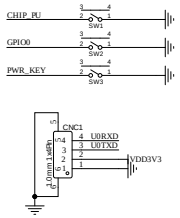

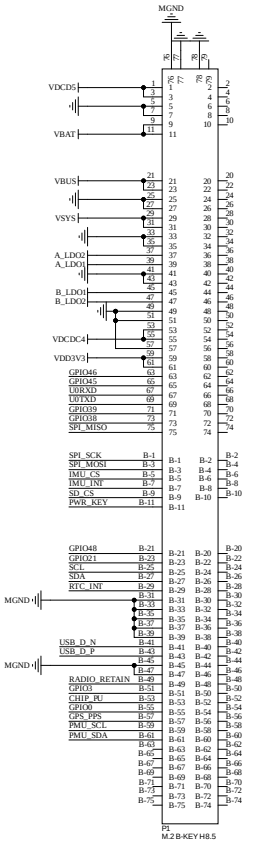

Expansion board Interface

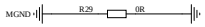

RTC

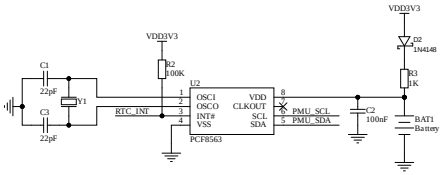

IMU

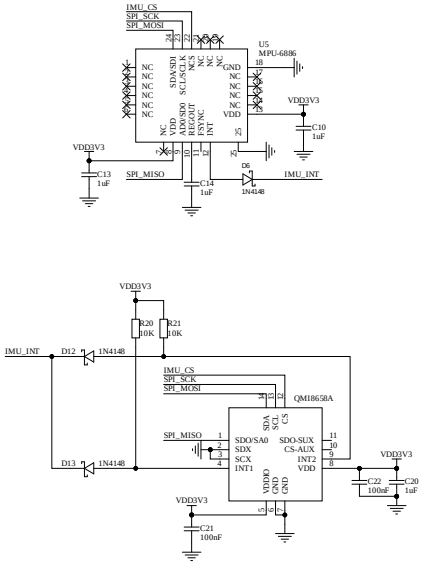

Battery Protection

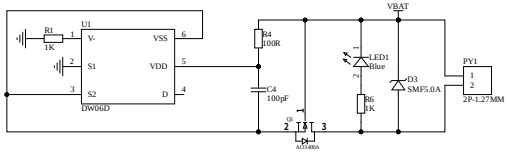

QMC

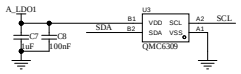

Sensor

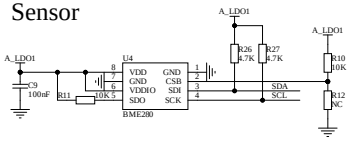

TF CARD

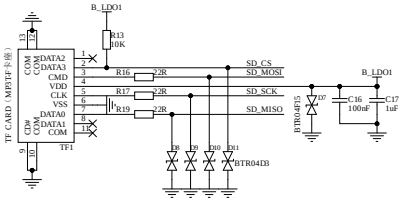

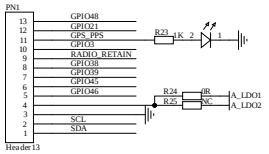

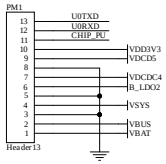

T-Beam-S3-Supreme V3.1